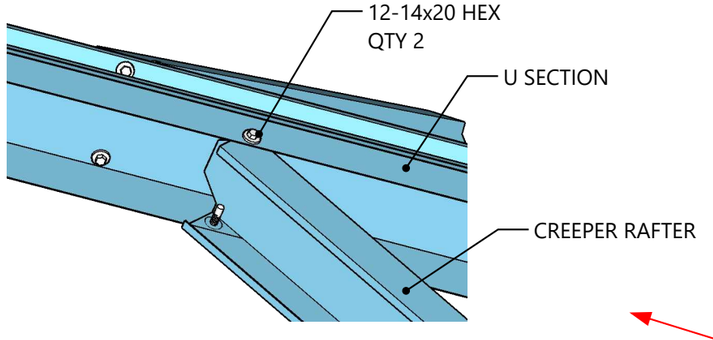

Creeper rafter to U section connection

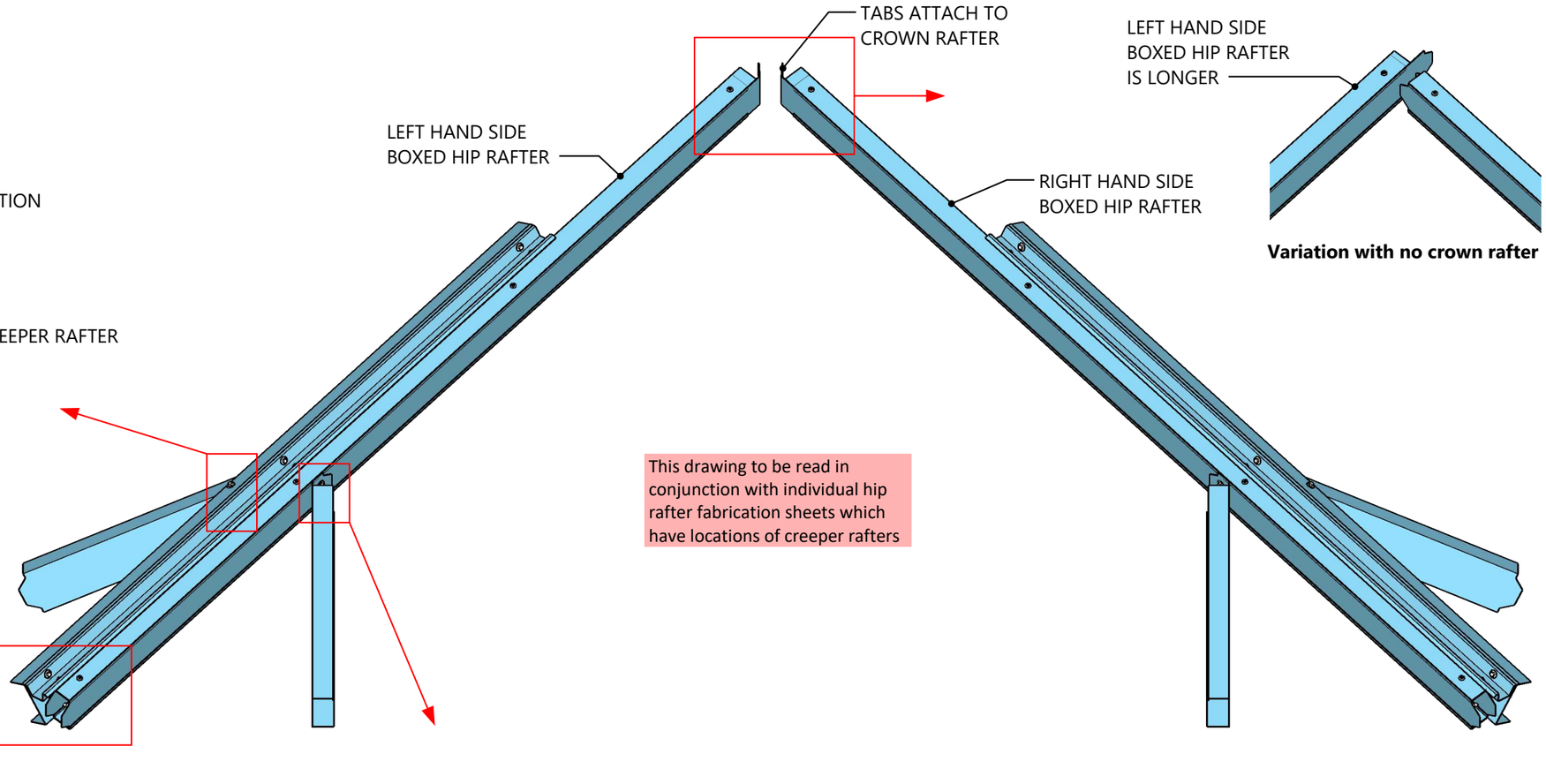

This drawing to be read in conjunction with individual hip rafter fabrication sheets which have locations of creeper rafters

Variation with no crown rafter

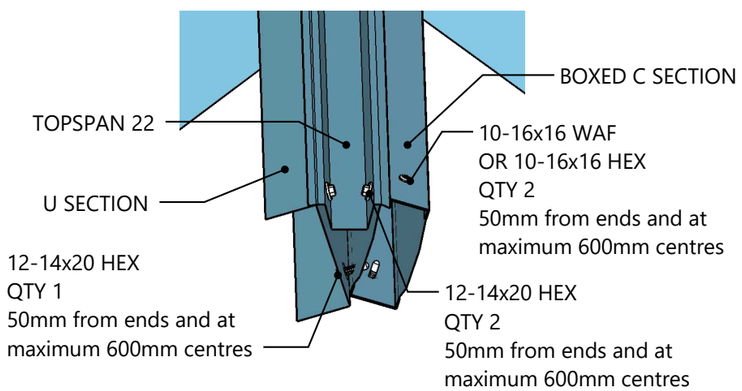

Boxed hip rafter detail

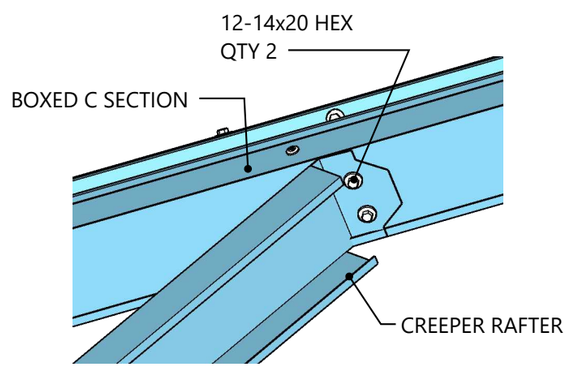

Creeper rafter to boxed hip connection

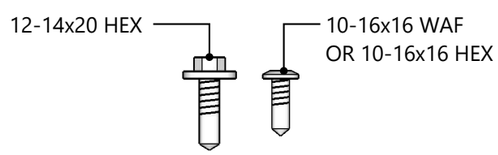

Fasteners

© BlueScope Steel Ltd

ENDURO FRAME®

Boxed hip rafters

Fabrication Drawing

REVISIONS

	DD/MM/YYYY	REMARKS
1	15/06/2020	ENDUROCADD® software v11.01.02
2		
3		
4		

01

A