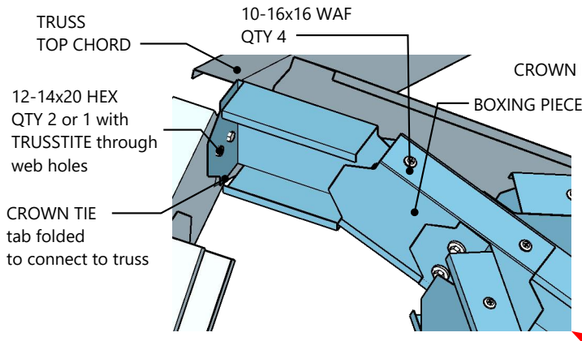

Crown rafter detail

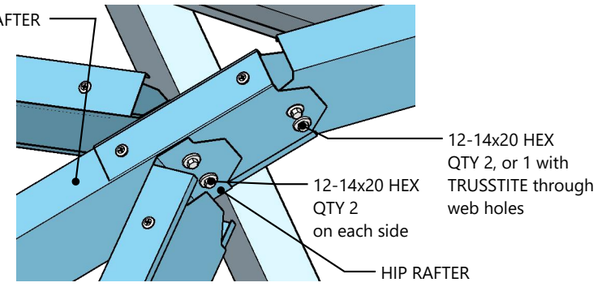

Crown rafter, reverse view

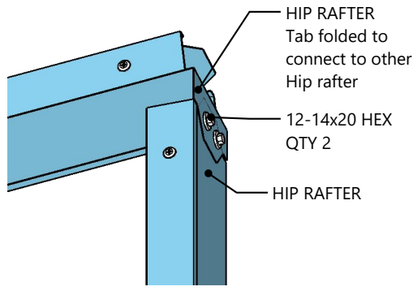

Option with no crown rafter

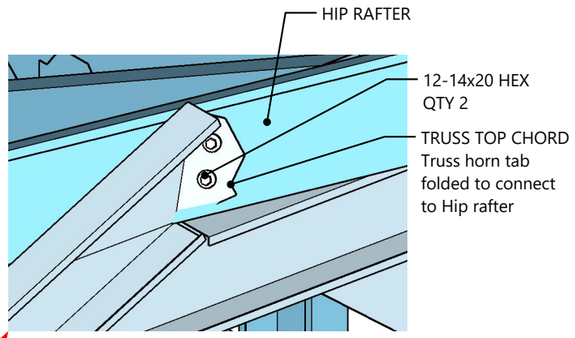

Truss horn detail

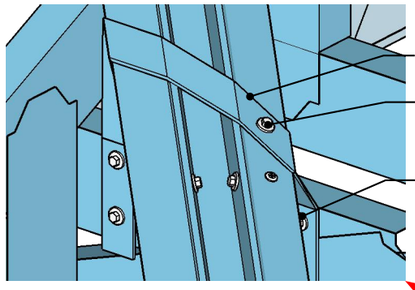

Truncated half truss detail

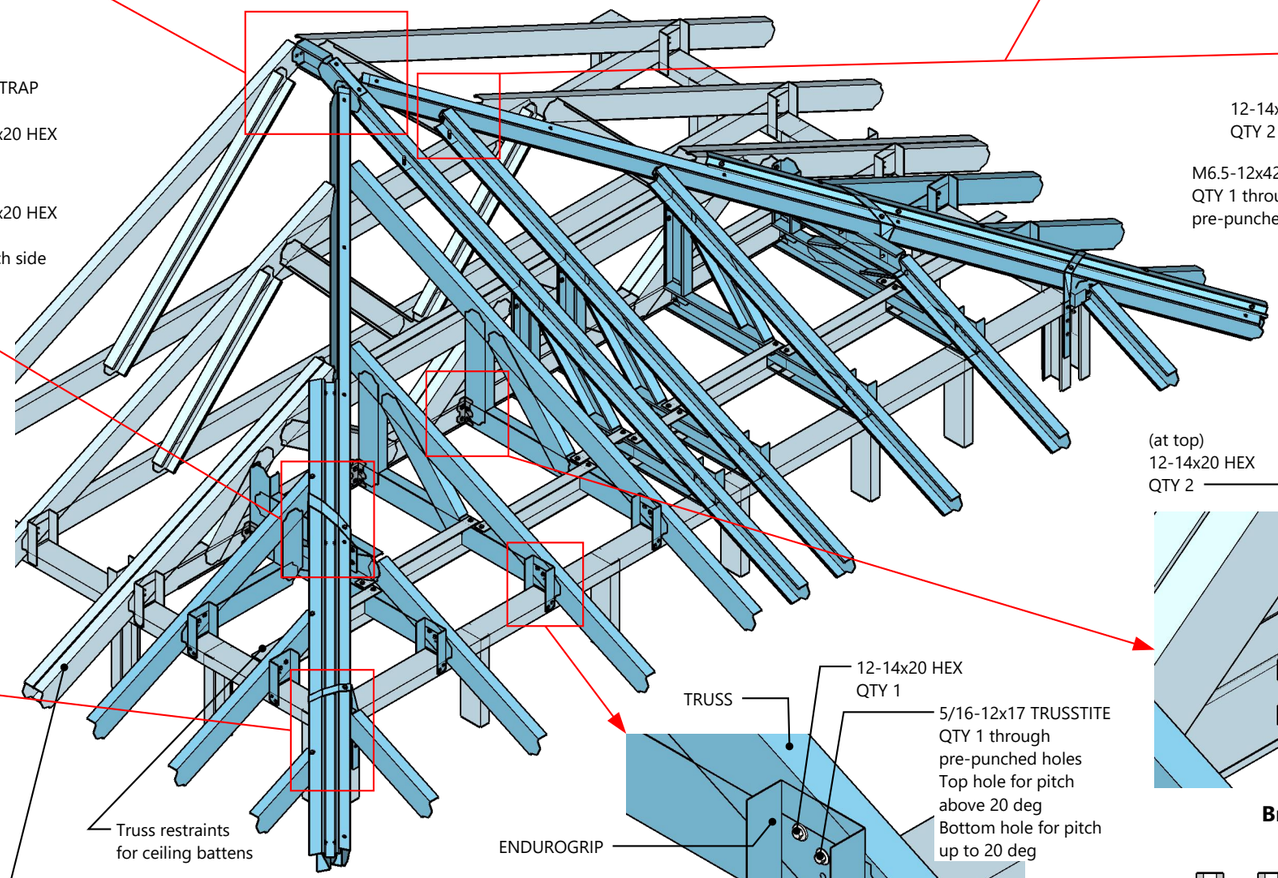

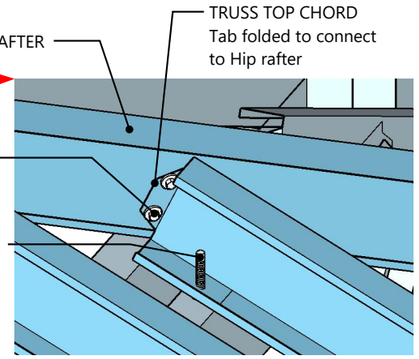

Half truss detail

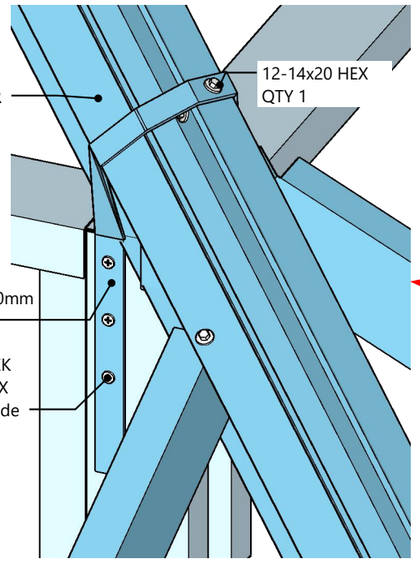

Hip rafter to wall tiedown

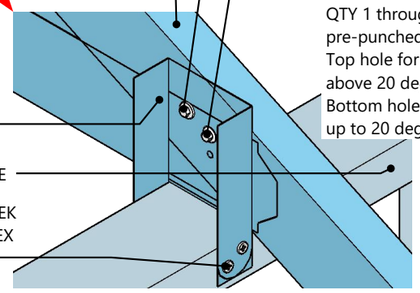

Truss to wall tiedown

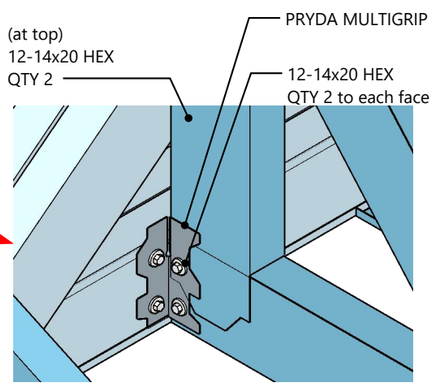

Bridge truss detail

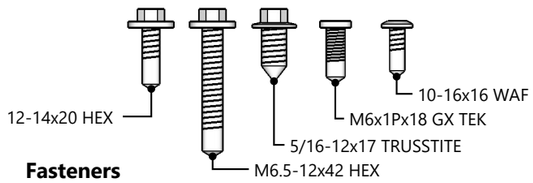

Fasteners

Scan QR code to go to the ENDUROFRAME® Installation Channel to see installation videos

Scan QR code to see 3D model of drawing.

© BlueScope Steel Ltd

ENDURO FRAME®

Hip end - Type 2 rafter, Boxed hip

Installation Drawing

REVISIONS		
	DD/MM/YYYY	REMARKS
1	17/02/2020	ENDUROCADD® software v11.01.19
2		
3		
4		

01

A